MR-015 & MR-02
Servo & Saver Pin Set

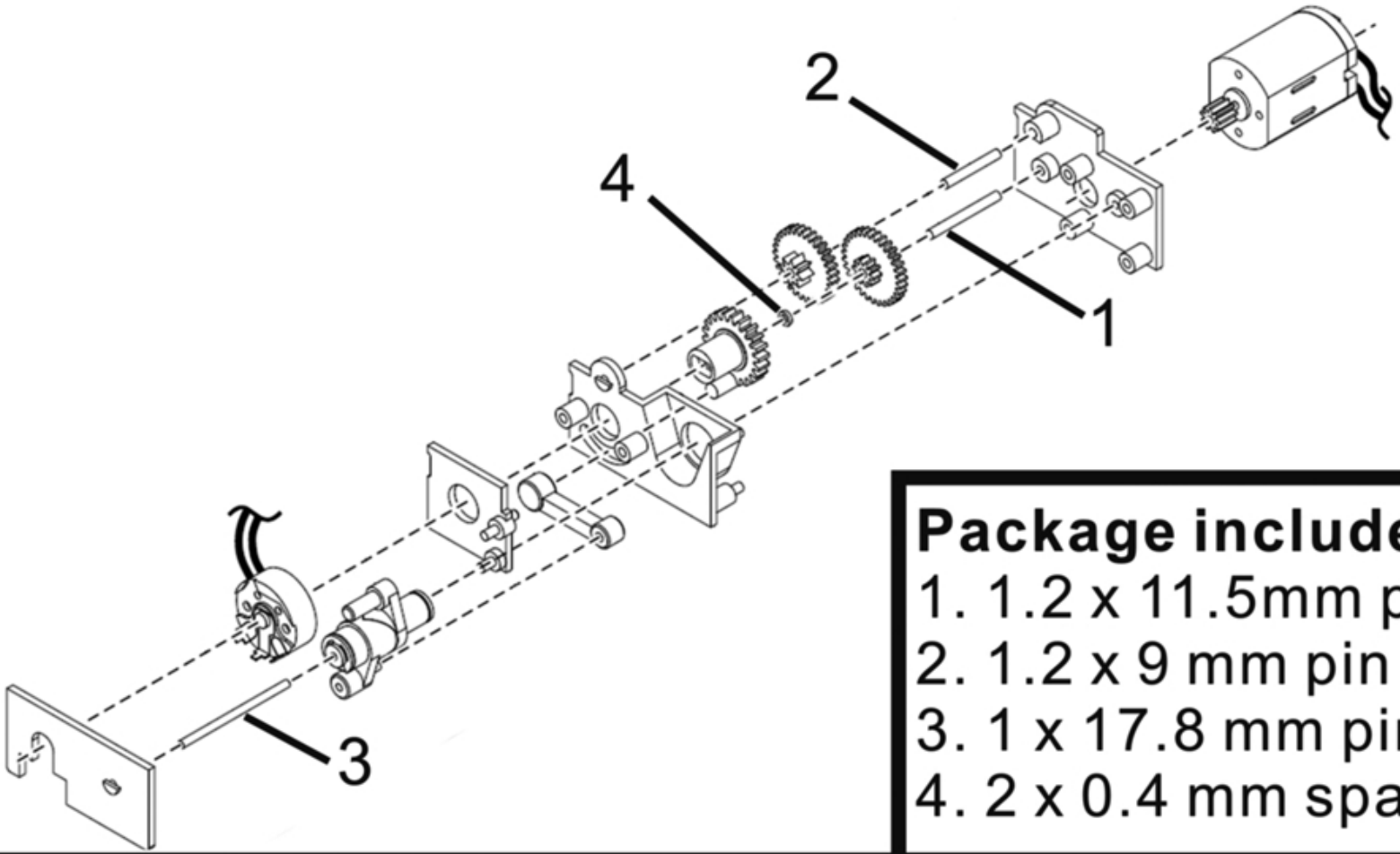

Package include:

1. 1.2 x 11.5mm pin x 1
2. 1.2 x 9 mm pin x 1
3. 1 x 17.8 mm pin x 1
4. 2 x 0.4 mm spacer x 2